CATALOG NO.

N194-5

First Edition

STYLES

N150-1

N150-2

N150-5

Adjusting instructions and illustrated parts list

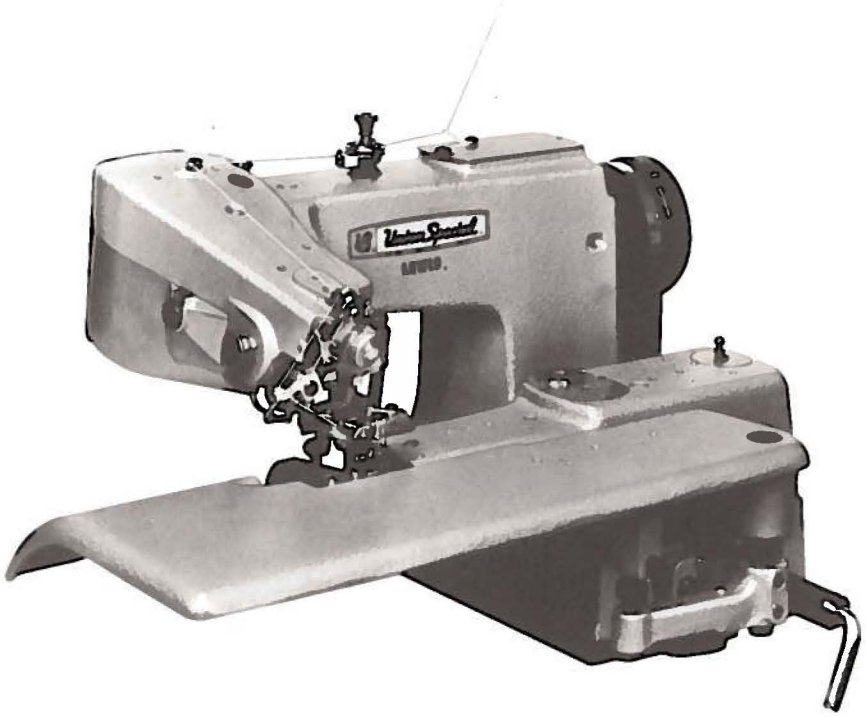

CLASS N150 - Blindstitch machines

Finest Quality

Union Special®
Industrial Sewing Equipment

CATALOG NO. N194-5

ADJUSTING INSTRUCTIONS

AND

ILLUSTRATED PART LIST

CLASS N150

STYLES

N150-1
N150-2
N150-5

First Edition

Printed in U.S.A.

July, 1986

IDENTIFICATION OF MACHINES

Each UNION SPECIAL LEWIS machine carries a style number which is stamped into the style plate located on the front of the machine arm. The serial number is stamped in the boss located on the top right rear of machine arm.

APPLICATION OF CATALOG

This catalog applies specifically to the standard styles of machines as listed herein. All references to direction, such as right and left, front and back, etc., are taken from the operator's position while seated at the machine, unless otherwise noted.

DESCRIPTION OF MACHINES

Single Thread, Single Curved Needle, Chain Stitch, Blind Stitch Machine. Needle Travels from Left to Right and Penetrates at an Angle 90 degrees to Line-of-Feed. Calibrated Penetration Adjustment, Push Button, for Quick Easy Adjustment of the Stitch Length and a Large Easy-to-Read Indicator Marked with Stitch Lengths. Knee Lifter for Inserting and Removing Work, Oscillating Ridge Former. Maximum Work Space to Right of Needle 7 1/2 inches (177.8mm).

N150-1 1 to 1 ratio non-skip stitch machine for hemming on dresses of light, medium and heavy weight materials, and also felling edge tape, and knit materials. Seam specifications 103 EF1-1 or 103 EFm-1 (modified).

N150-2 Equipped with quick change selector dial for non-skip or 2 to 1 skip stitch for hemming medium weight dresses, skirts, blouses, curtains and similar garments. Seam specifications 103 EF1-1 or 103 EFm-1 (modified).

N150-5 Same as Style N150-1 except for hemming cuffs and cuffless medium weight trousers, slacks and similar garments. Seam specification 103 EF1-1.

SAFETY RULES

CAUTION!

THIS SAFETY SYMBOL INDICATES YOUR PERSONAL SAFETY IS INVOLVED

TO PREVENT PERSONAL INJURY:

- All power sources to the machine MUST be TURNED OFF before threading, oiling, adjusting or replacing parts.
- Wear safety glasses.
- All shields and guards MUST be in position before operating machine.
- DO NOT tamper with safety shields, guards, etc., while machine is in operation.

OILING

The machine should be oiled twice daily, before the morning and afternoon starts. Use a good grade of straight mineral oil with a Saybolt viscosity of 90 to 125 seconds at 100 degrees Fahrenheit. Most of the oiling points on the machine are marked in red. However, reference to the oiling diagram will be beneficial.

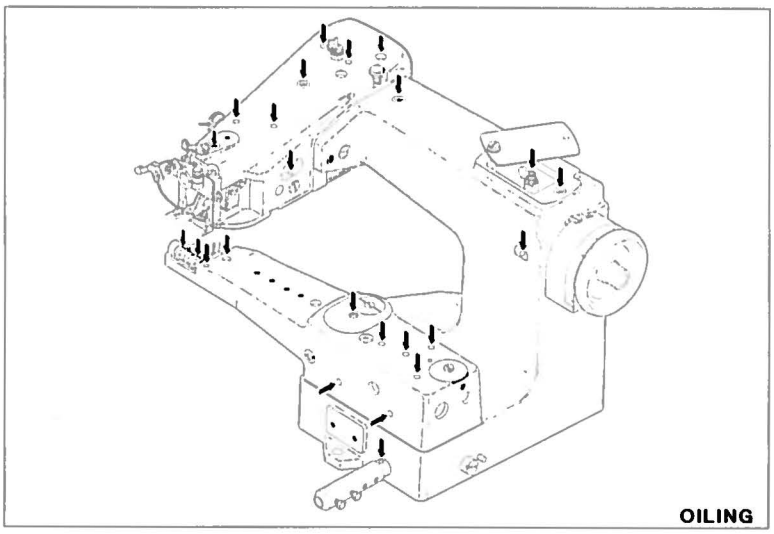

SPEED

Maximum recommended speed for these machines is 3000 R.P.M., operating direction of the handwheel is away from the operator.

NEEDLES

NEEDLE TYPE
29 BL-065/025
29 BL-075/029
29 BL-090/036
29 BL-100/040
29 BL-110/044
29 BM-075/029 (ball point)
29 BM-090/036 (ball point)

Selection of proper needle size is determined by size of thread and weight of material used. Thread should pass freely through needle eye in order to produce a good stitch formation.

To have needle orders promptly and accurately filled, an empty package, a sample needle, or the type number should be forwarded. Use the description on label. A complete order would read: "100 needles, Type 29 BL-90/036".

CHANGING NEEDLES

When changing the needle, make sure that it is inserted in the needle carrier as far as it will go and tighten clamp screw securely. Immediately discard any needle which may have a hooked or blunt point, as improper needle penetration will result.

THREADING

To thread the machine, turn handwheel in operating direction until the needle carrier is in its highest position.

Refer to the threading diagram (Fig.1).

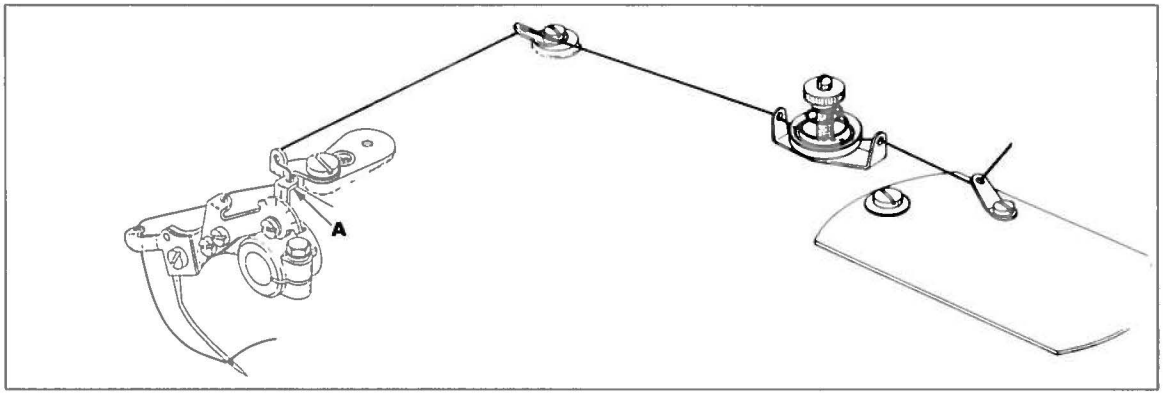

Fig. 1

Additional thread control can be obtained by repositioning needle thread pull-off eyelet (A,Fig.1) to the right for more thread or to the left for less thread, as required.

ADJUSTING

ADJUSTING PRESSER FOOT TO NEEDLE

A view of the presser foot (Fig.2) is shown to illustrate the various parts of the foot which are referred to in this and subsequent adjustments.

Below is the key to the labeling as shown in Fig.2

A-Needle guide
B-Cloth opening
C-Needle track
D-Looper opening
E-Radius run-out edge
F-Cloth retainer
G-Set screw
H-Needle groove
J-Cloth retainer bushing
K-Eccentric Pin
L-Chaining finger

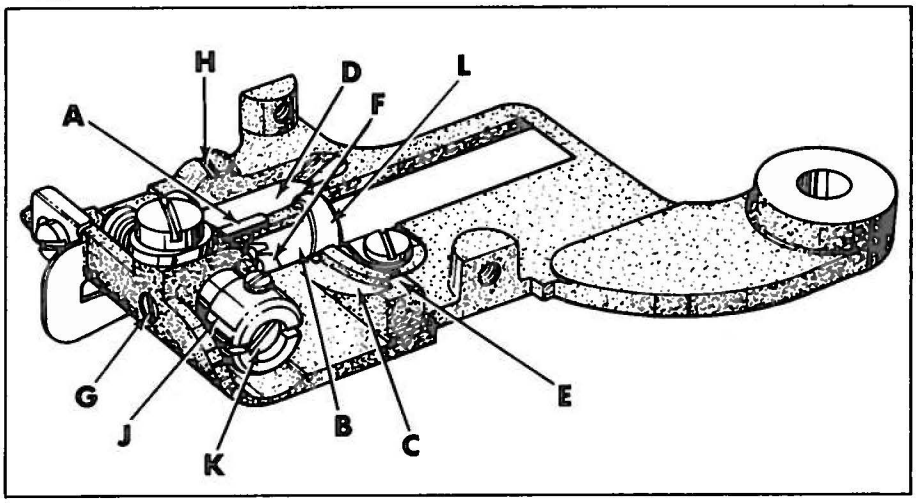

Fig. 2

Insert a new needle of proper type and size as far as it will go into the needle carrier and securely tighten the clamp screw. Set the presser foot to the needle so the needle point contacts the needle guide (A,Fig.2) when traveling from left to right and so that the needle remains in contact with the needle guide until the point of the needle lies in the span between the center of the cloth opening (B) and the right side of the cloth opening. As the needle continues to move to the right, play should develop between the needle and the needle guide until the needle reaches the needle track (C).

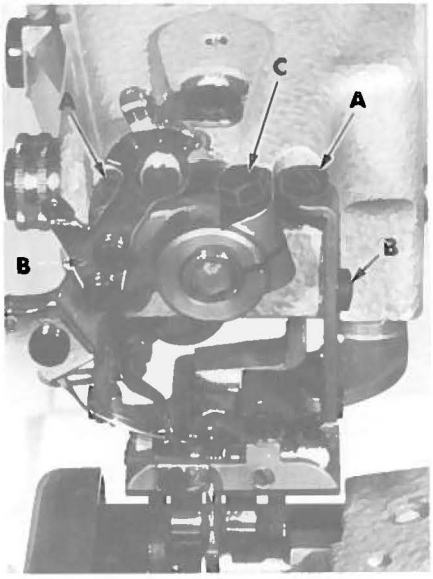

Fig. 3

ADJUSTING PRESSER FOOT TO NEEDLE (Continued)

If adjustment is required, loosen screws (A,Fig.3) on top of presser foot brackets, so that the heads do not contact the brackets. Loosen screws (B) on the side of each bracket, move presser foot up, retighten screws (B) just enough to hold the presser foot up. Adjust the top screws (A) equally, a little at a time, to obtain the above settings. After screws (B) have been tightened, no further adjustment of the top screws (A) should be attempted.

SETTING NEEDLE STROKE

Turn the handwheel in operating direction until the needle point is at the left end of stroke. It should be flush with the left side of looper opening (D,Fig.2). The needle point, at right end of stroke, should be to the top of radius run-out edge (E). If this is not the case, the travel of the needle will have to be adjusted in the following manner. Turn the handwheel in operating direction until the needle eye is flush with the right side of the cloth opening (B,Fig.2) in the presser foot. Remove rubber plug (A,Fig.4). Loosen the clamp screw in needle crank (accessible through the hole). Turn the handwheel in operating direction until the needle carrier is at its extreme right end of travel. Remove head cover and turn the needle eccentric ball stud (A, Fig.5) So that its slot is vertical and punch marks in the ball stud are down, as viewed in (Fig.5). The needle eccentric ball stud is located in the head, at the rear near the top. Retighten the clamp screw and recheck the position of the needle point in relation to the left side of looper opening. Loosen needle carrier clamp screw (C,Fig.3) and rotate carrier as required for above setting. The needle carrier should be set front to back so the side of the needle is flush to .003 inch (.076 mm) from vertical wall at the right side of presser foot. It may be necessary to slightly retard or advance the above adjustments to obtain desired results.

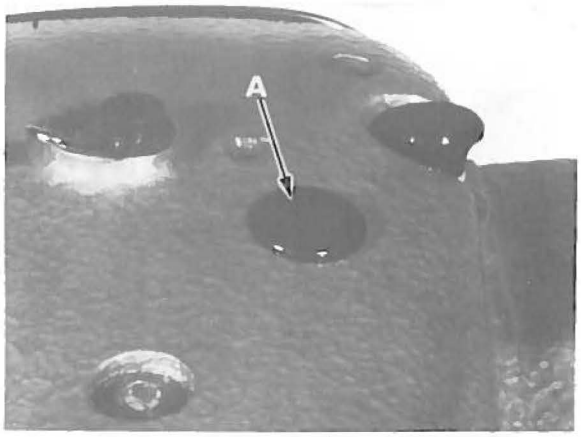

Fig. 4

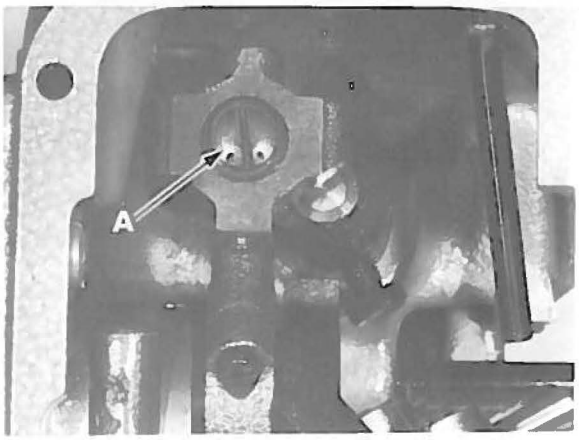

Fig. 5

CAUTION: When adjusting the needle eccentric ball stud, make sure that it is seated against the needle shaft crank.

LOOPER TIMING AND ADJUSTMENT

Insert the looper into its carrier so that the flat on its shank corresponds with flat in carrier and allow 1/64 inch (.4mm) clearance between looper shoulder and end of looper carrier.

In the left end of the mainshaft (A,Fig.6) is a "V" groove and on the looper crank (B) is a timing mark.

Turn the handwheel in operating direction until the "V" groove in the mainshaft is at bottom. Loosen two screws (A,Fig.7) in the looper crank (B) and position the crank so that the timing mark lines up with the right edge of the "V" groove in the mainshaft (see Fig.6).

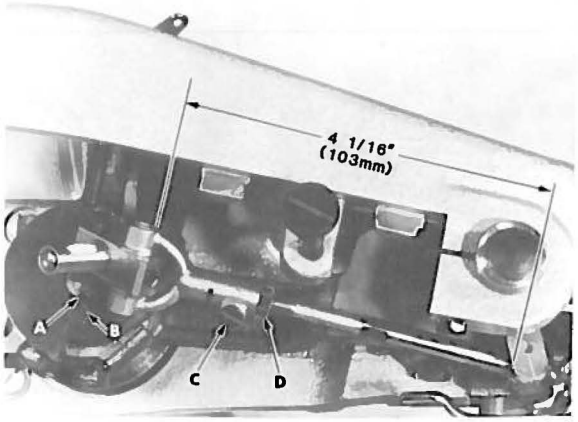

Fig. 6

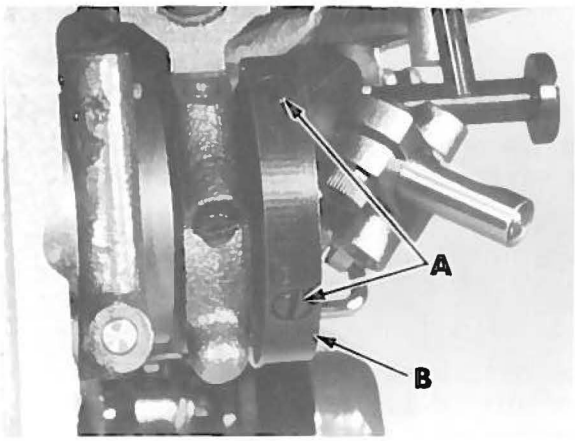

Fig. 7

Hold crank (B,Fig.7) against needle drive eccentric and tighten screws in looper crank securely.

The approximate distance from the back side of the front ball to the near edge of the inside of link pin should be 4 1/16 inches (103.2mm). See Fig.6. This is merely an approximate setting.

Again rotate the handwheel in operating direction until the long prong of the looper is over center line of spot or scarf of needle. Loosen the looper yoke clamp screw (C,Fig.6) and loosen lock nut (D), on looper carrier shaft. Roll the looper shaft (using the flat) until the long prong of the looper just clears the spot on scarf of the needle. Hold the looper carrier shaft from moving and tighten lock nut securely. Tighten yoke clamp screw securely. Check the distance from the right side of the long prong (A,Fig.8) on the looper to the left end of needle eye. The distance should be approximately 3/32 inch (2.4mm), as shown in (Fig.8).

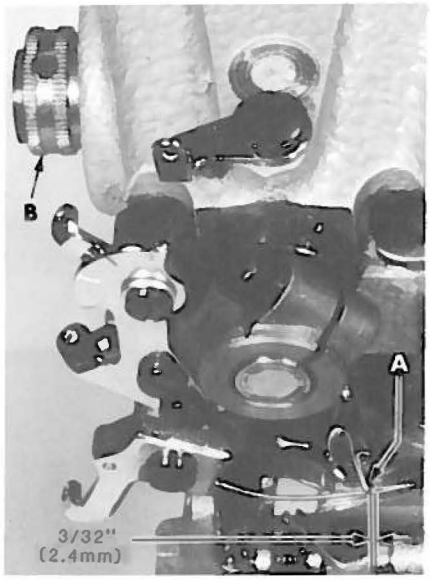

Fig. 8

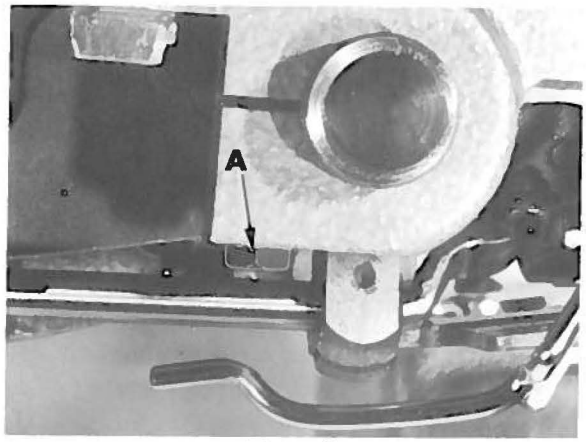

Fig. 9

If adjustment is required, loosen clamp screw (A,Fig.9) as viewed from left end of machine and move looper eccentric sleeve (B,Fig.8) left or right, then tighten clamp screw. Rotate handwheel in operating direction and check the distance between the short prong of looper and chaining finger on presser foot. There should be approximately 1/32 inch (.8mm) clearance.

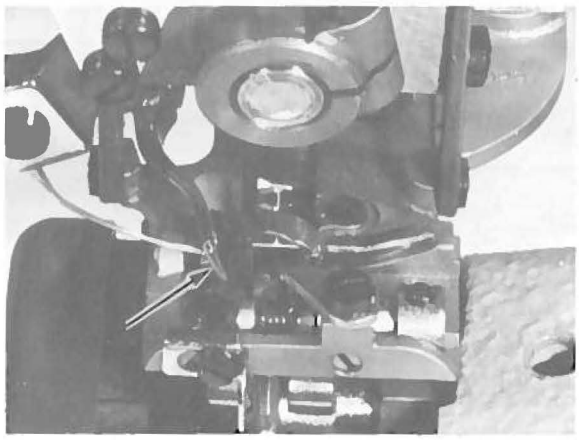

Fig. 10

LOOPER TIMING AND ADJUSTMENT (Continued)

Rotate handwheel in operating direction and make sure the short prong of looper does not strike looper opening in presser foot, (see Fig.10).

If adjustment is required, loosen clamp screw (A,Fig.9) and move looper sleeve (B,Fig.8) to the left the LEAST AMOUNT required, until this condition is obtained and tighten clamp screw. Rotate the handwheel in operating direction and check to ensure the needle does not strike the crotch of looper (see Fig.11).

If adjustment is required, loosen set screw (A,Fig.7) and turn crank (B) slightly as required until this condition is obtained.

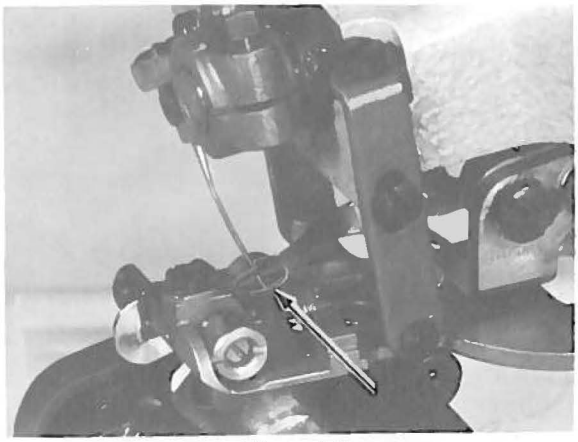

Fig. 11

Rotate handwheel in operating direction to ensure needle enters approximately equal distance between the prongs of looper (see Fig.11). If adjustment is required, loosen clamp screw (A,Fig.9) and carefully rotate looper eccentric sleeve (B,Fig.8) until this condition is obtained, being careful not to move eccentric sleeve left or right. Tighten clamp screw securely. NOTE: "LOOPER TIMING AND ADJUSTMENT" has been a coordination of settings basicly involving looper carrier, driving crank and looper eccentric sleeve. Different materials or different threads used may require a slight variation of settings. If necessary, only roll the looper to the needle slightly by loosening screw (C,Fig.6) and nut (D) permitting rotation of looper carrier to achieve desired conditions... retighten nut and screw.

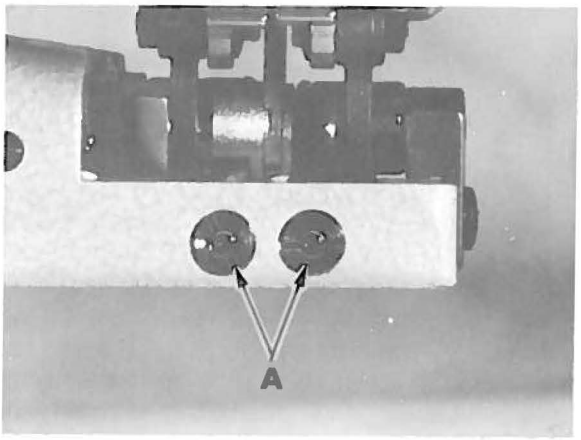

Fig. 12

SETTING FEED PLATES

Pressure on the feed plates is regulated by nuts (A,Fig.12). Turning them counterclockwise increases the tension and turning them clockwise acts the reverse, as viewed in (Fig.12). Set spring pressure so screw is approximately 1/16 inch (1.6mm) from inside edge of nut. The feed plates must drop uniformly when knee shaft is depressed.

SETTING FEED PLATES (Continued)

If adjustment is required, loosen set screw (A,Fig.13) in front of cylinder and move depressing feed plate shaft (B) so there is approximately 1/32 inch (.8mm) clearance between feed plates and depressing shaft. Tighten set screw securely.

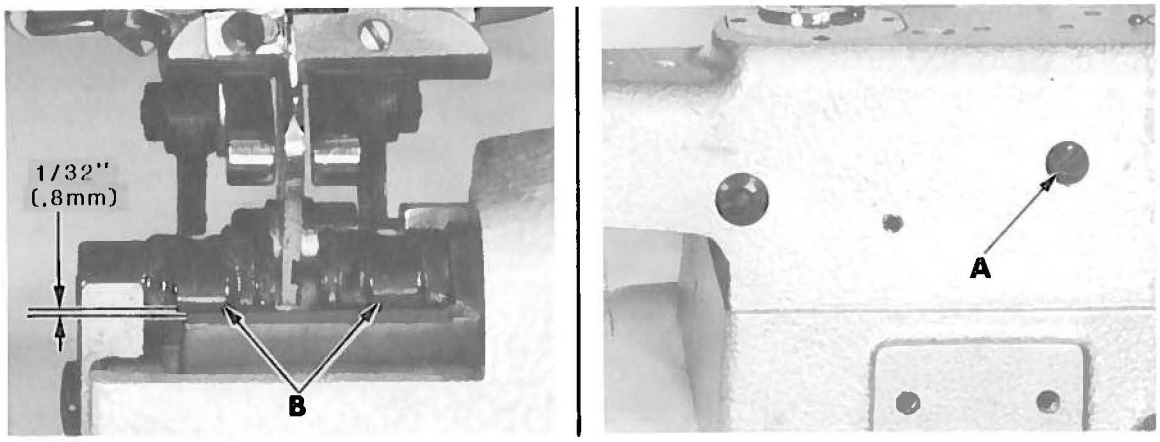

Fig. 13

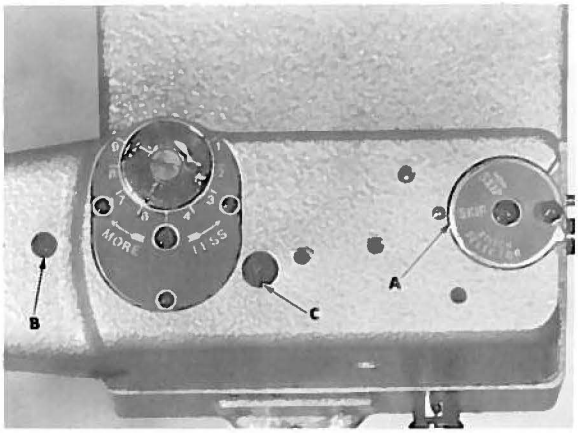

Fig. 14

SETTING RIDGE FORMER

On Style N150-2, set the skip stitch selector (A,Fig.14) in the skip stitch position, as shown in Fig. 14. Then proceed as follows for all machine Styles. Ridge former disc (A,Fig.15) must be centered in the cloth opening of presser foot with no shake (left or right).

If adjustment is required, loosen set screw (B) which locks pivot bearing (C) and release tension on cradle spring (A,Fig.17) by turning nut (A,Fig.16) counterclockwise. Adjust pivot bearing (C,Fig.15) (B,Fig.17) as required to remove shake, but ridge former shaft cradle (C,Fig.17) MUST NOT BIND. Tighten set screw (B,Fig.15) securely. Apply pressure on cradle spring (A,Fig.17) by turning nut (A,Fig.16) clockwise until screw (B) is flush with screwdriver slots in nut.

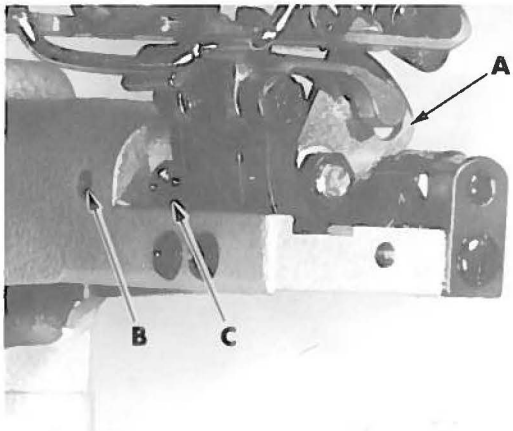

Fig. 15

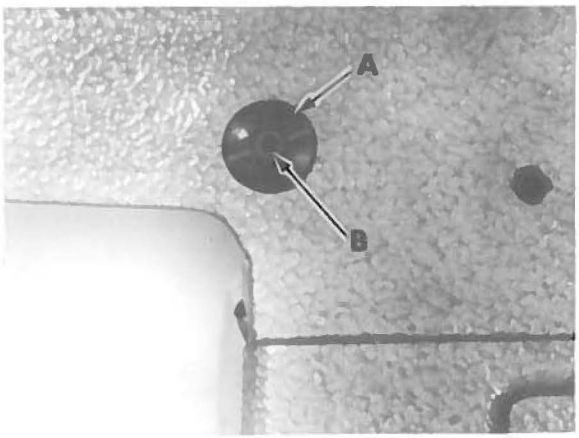

Fig. 16

SETTING RIDGE FORMER (Continued)

If ridge former disc is not centered in cloth opening of presser foot, loosen screw (B,Fig.14) in collar (D,Fig.17) and screw (C,Fig.14) in ridge former shaft lever, allowing ridge former shaft (E,Fig.17) to be moved laterally to position ridge former disc as required. While holding ridge former disc in position, thrust collar (D) against ridge former shaft cradle (C) and tighten screw (B,Fig.14) securely. Temporarily tighten screw (C) in ridge former shaft lever.

Ridge former regulator (A,Fig.18) controls the amount of needle penetration at maximum penetration (9 on the dial). The needle should graze the ridge former disc enough to note the needle lifting off of the needle guide of presser foot. If adjustment is required. Remove locking screw (B) and turn adjusting screw (located beneath same) as required. Replace and tighten locking screw (B). The needle moving from left to right should be timed with the ridge former so that when the ridge former has reached its farthest travel to the rear, the point of needle is over the center of the width of the ridge former.

(As viewed from bottom of machine)

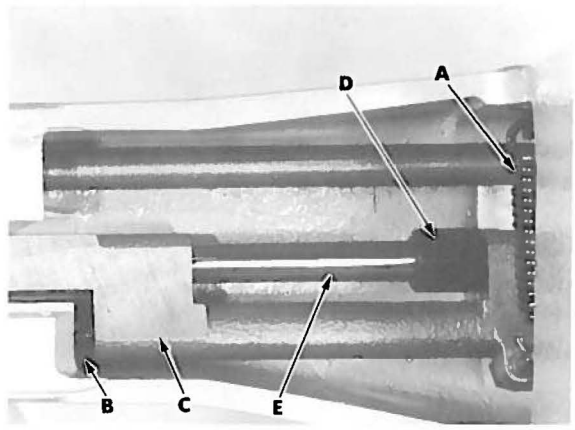

Fig. 17

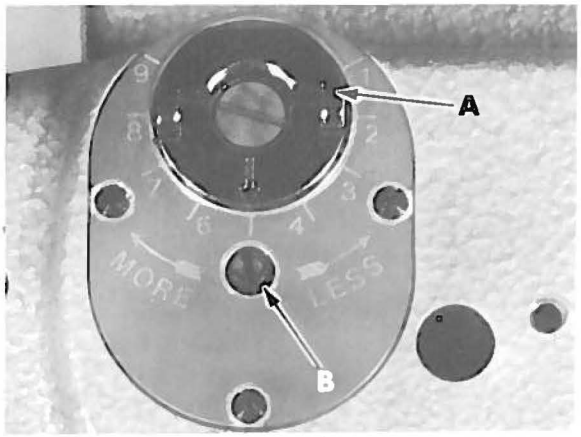

Fig. 18

At this time, the needle should be 1/16 inch (1.6mm) from the front of the ridge former disc. If adjustment is required rotate handwheel in operating direction until the point of needle is over the center of the width of ridge former disc.

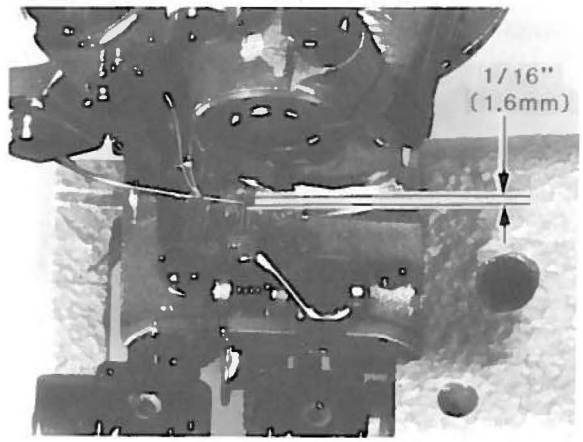

Fig. 19

Loosen screw (C,Fig.14) and set ridge former disc the required distance past needle as viewed in (Fig.19). Hold ridge former disc in this position and to the right while tightening screw (B) securely.

SETTING FEED DOG

As the needle travels from right to left, the feed dog should contact feed plates when point of needle is flush with right side of cloth opening behind needle. Feed dog should depress feed plates approximately the depth of one full tooth. The feed dog is adjusted by means of two screws (A,Fig.20) on the right side of the head. The slot in eccentric stud (B) should be vertical when the feed bar is all the way towards the operator and the punch marks at the end of the slot in stud should be up.

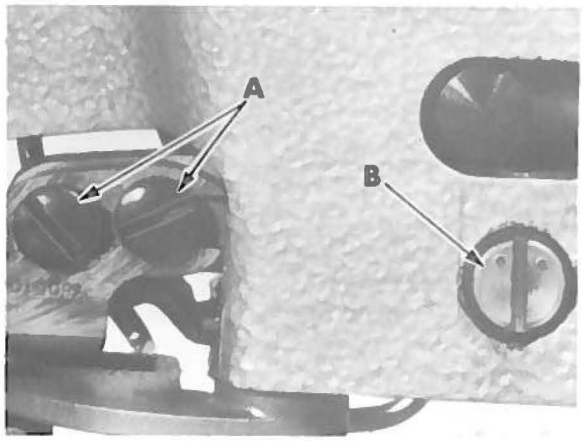

Fig. 20

To position stud, loosen clamp screw (A,Fig.21) and position stud as required, retighten clamp screw. It may be necessary to rotate the punch marks slightly, (in stud) to obtain a full tooth depth for shorter numbers of stitches.

CAUTION: Feed dog must not graze looper, chaining finger or the back of the feed dog slot in presser foot.

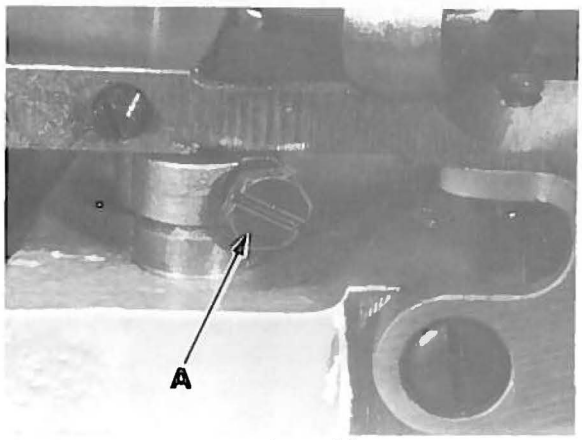

Fig. 21

STITCH LENGTH

Press plunger (A,Fig.22) in firmly, while holding plunger in, turn handwheel in operating direction until stitch regulating finger is felt to drop into the slot of feed regulator. Continuing to hold the plunger in, turn handwheel in operating direction to increase the stitch length or in opposite direction to decrease the stitch length. Observe the white timing mark on the handwheel with the numbers on the upper belt guard and graduation plate to obtain the correct stitch length then release knob.

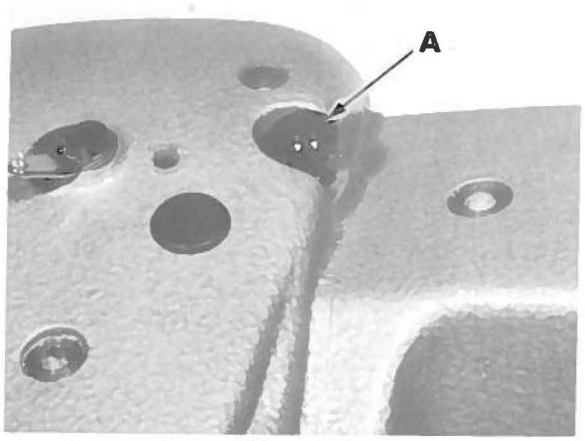

Fig. 22

CLOTH RETAINER

Cloth retainer (A,Fig.23) should be centered over ridge former disc and set as close as possible to the needle. Right to left adjustment can be accomplished by loosening set screw (B), repositioning bushing (C), as required and retighten set screw. Front to rear adjustment can be accomplished by loosening set screw (D), turn eccentric pin (E) as required and retighten set screw.

When sewing on material, the cloth retainer must hold material firmly against ridge former disc... otherwise skip-stitching may occur. More or less pressure can be applied to the cloth retainer by loosening set screw (B,Fig.23) and rotate bushing (C) as required, being careful to keep cloth retainer centered over ridge former disc and retighten set screw.

NOTE: Recheck cloth retainer setting to needle.

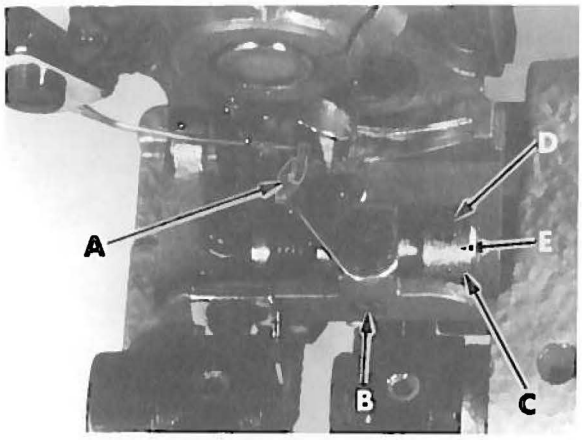

Fig. 23

ORDERING REPAIR PARTS

ILLUSTRATIONS

This catalog has been arranged to simplify ordering repair parts. Exploded views of various sections of the mechanism are shown so that the parts may be seen in their actual position in the machine. On the page opposite the illustration will be found a listing of the parts with their part number, description and the number of pieces required in the particular view being shown.

Numbers in the first column are reference numbers only and merely indicate the position of that part in the illustration. Reference numbers should never be used in ordering parts. Always use the part number listed in the second column.

Component parts of sub-assemblies which can be furnished for repairs are indicated by indenting their descriptions under the description of the main sub-assembly.

At the back of the book will be found a numerical index of all the parts shown in this book. This will facilitate locating the illustration and description when only the part number is known.

TERMS

Prices are net cash and subject to change without notice. All shipments are forwarded F.O.B. shipping point. Parcel Post shipments are insured unless otherwise directed. A charge is made to cover postage and insurance.

EXPLODED VIEWS
AND
DESCRIPTION OF PARTS

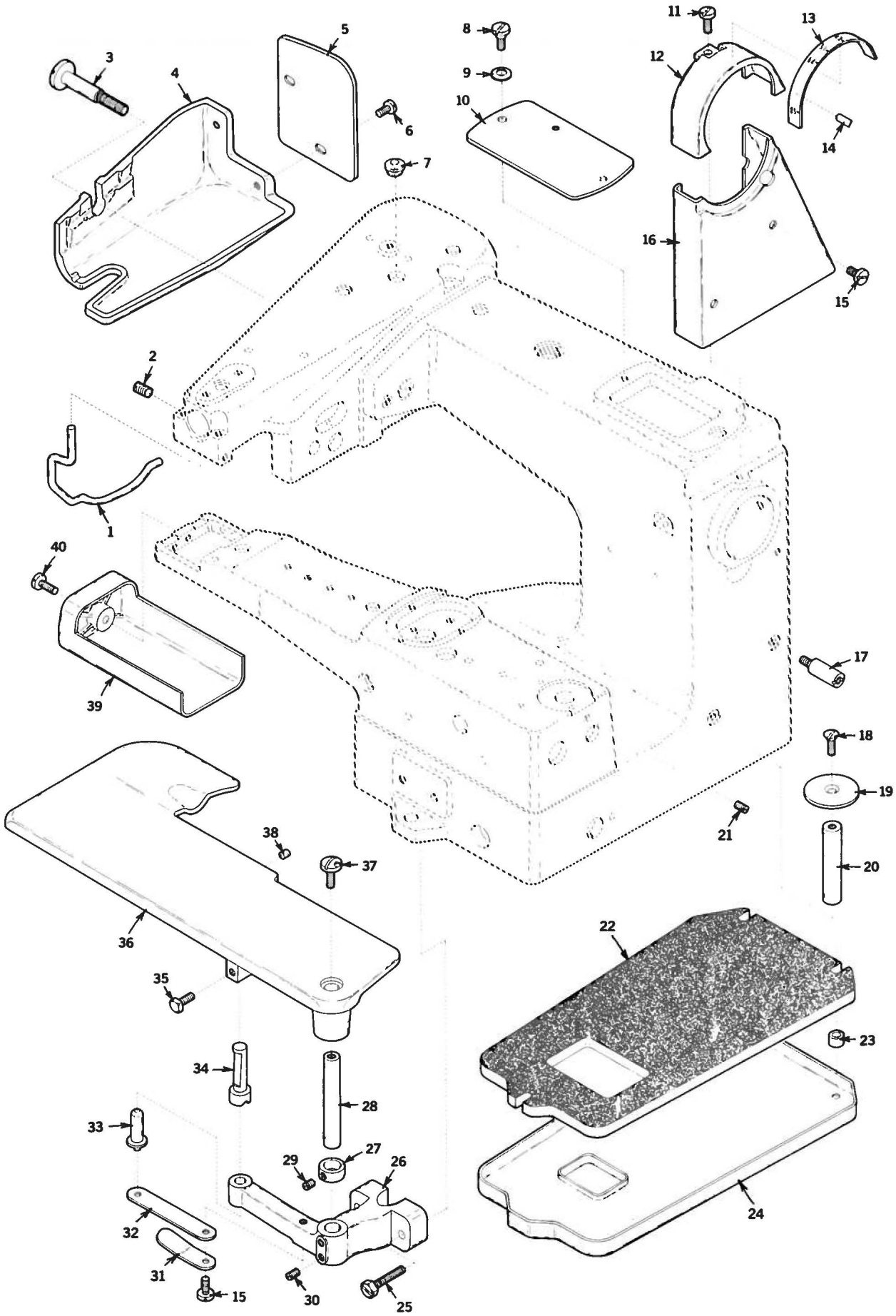

MISCELLANEOUS COVERS

Ref. No.	Part No.	Description	Amt. Req.
1	Y80146	Finger Guard	1
2	Y9526	Screw	1
3	Y6869	Screw	1
4	Y80295	Head Cover	1
5	Y80144	Head Cover (rear)	1
6	Y4475	Screw	2
7	Y93864	Plug	1
8	Y6147	Screw	1
9	Y559	Spring Washer	1
10	Y80746	Top Cover	1
11	Y4555	Screw	1
12	Y80293	Belt Guard (upper)	1
13	Y80118	Stitch Length Indicator Decal	1
14	Y960	Stop Position Decal	1
15	Y4551	Screw	3
16	Y80297	Belt Guard (lower)	1
17	Y3570	Screw	2
18	Y5347	Screw	1
19	Y81608	Stop Pin Cover	1
20	Y81607	Stop Pin for Ridge Forming Shaft	1
21	Y3556	Screw	1
22	Y80154	Felt Pad	1
23	Y80153	Oil Pan Seal	3
24	Y80155	Oil Pan	1
25	Y5566	Screw	2
26	Y82305	Work Support Bracket	1
27	Y80123	Collar	1
28	Y80122	Pin	1
29	Y3554	Screw	2
30	Y3642	Screw	2
31	Y80128	Support Spring (small)	1
32	Y80127	Support Spring (large)	1
33	Y80126	Support Spring Pin	1
34	Y80125	Support Latch Pin	1
35	Y5662	Screw	1
36	Y82304	Work Support Plate	1
37	Y4641	Screw	1
38	Y20072	Cloth Plate Bumper	1
39	Y80115	Cylinder Cover	1
40	Y4481	Screw	1

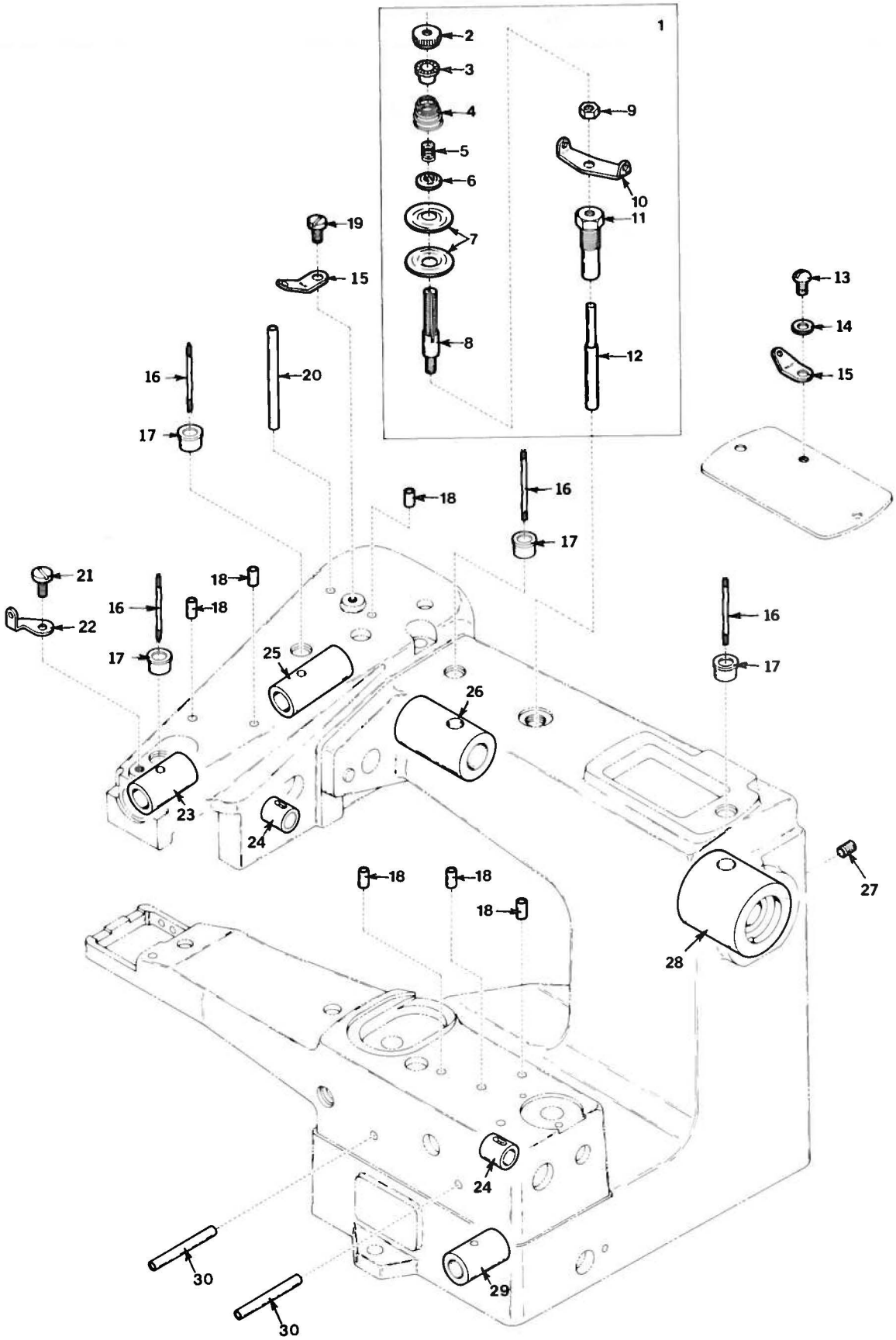

THREAD EYELETS AND BUSHINGS

Ref. No.	Part No.	Description	Amt. Req.
1	Y80740	Thread Tension, Complete	1
2	Y182	Spring Nut	1
3	Y20126	Bushing	1
4	Y85277	Spring	1
5	Y80744	Spring	1
6	Y80743	Spring Holder	1
7	Y31111	Disc	2
8	Y6560	Post	1
9	Y364	Nut	1
10	Y80745	Eyelet	1
11	Y80741	Support	1
12	Y80742	Release Pin	1
13	Y1330	Screw	1
14	YA532	Washer	1
15	Y33764	Eyelet	2
16		Oil Wick	4
17	Y80131	Oil Cup	4
18	Y80132	Oil Tube	6
19	Y4474	Screw	1
20	Y80136	Oil Tube	1
21	Y4471	Screw	1
22	Y80393	Eyelet (front)	1
23	Y80221	Needle Drive Shaft Bushing	1
24	Y80511	Bushing	2
25	Y80220	Needle Drive Shaft Bushing	1
26	Y80204	Main Shaft Bushing	1
27	Y3643	Screw	1
28	Y80200	Main Shaft Bushing	1
29	Y80305	Knee Press Bushing	1
30	Y80135	Oil Tube	2

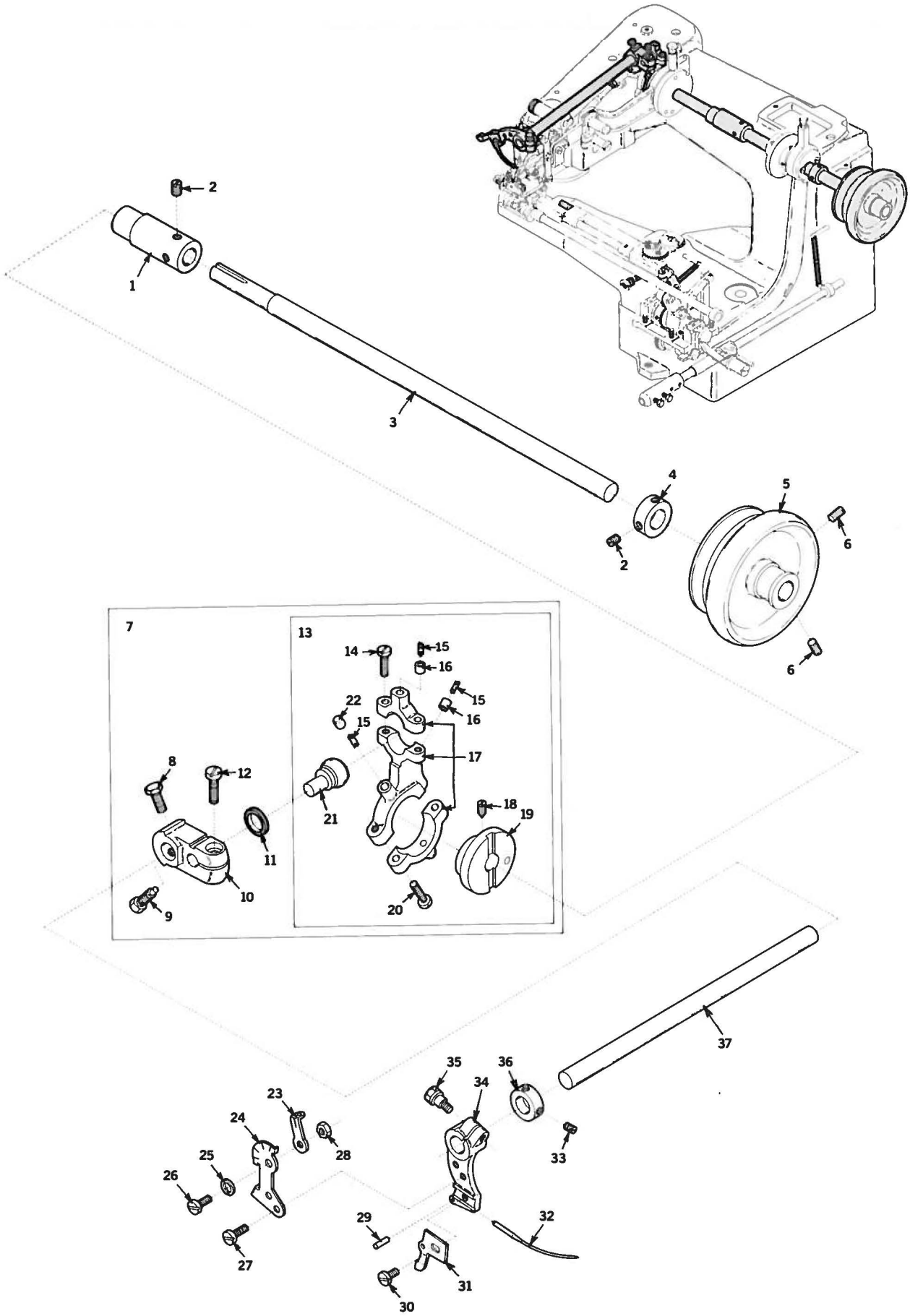

NEEDLE DRIVE MECHANISM

Ref. No.	Part No.	Description	Amt Req.
1	Y80701	Tension Release Eccentric	1
2	Y3554	Screw	4
3	Y80202	Mainshaft	1
4	Y80123	Thrust Collar, for Styles N150-1, -5	1
5	Y80145	Handwheel	1
6	Y3595	Screw	2
7	Y80208	Needle Driving Shaft Lever, Complete	1
8	Y5557	Screw	1
9	Y5553	Screw	1
10	Y80218	Crank	1
11	Y608	Fiber Washer	1
12	Y4554	Screw	1
13	Y80209	Needle Drive Eccentric, Complete	1
14	Y4391	Screw	2
15		Oil Wick	3
16	Y80216	Oil Retainer (with hole)	2
17	Y80210	Connecting Rod	1
18	Y3551	Screw	1
19	Y80211	Needle Drive Eccentric	1
20	Y4392	Screw	2
21	Y80217	Ball Eccentric	1
22	Y80215	Oil Retainer (without hole)	1
23	Y80391	Needle Thread Pull-off	1
24	Y80392	Eyelet	1
25	Y644	Spring Washer	1
26	Y6035	Screw	1
27	Y4358	Screw	2
28	YA322	Nut	1
29	Y80224	Pin	1
30	Y4397	Screw	1
31	Y80226	Needle Clamp	1
32		Needle	1
33	Y3471	Screw	2
34	Y80328	Needle Carrier	1
35	Y5549	Screw	1
36	Y80222	Collar	1
37	Y80219	Needle Driving Shaft	1

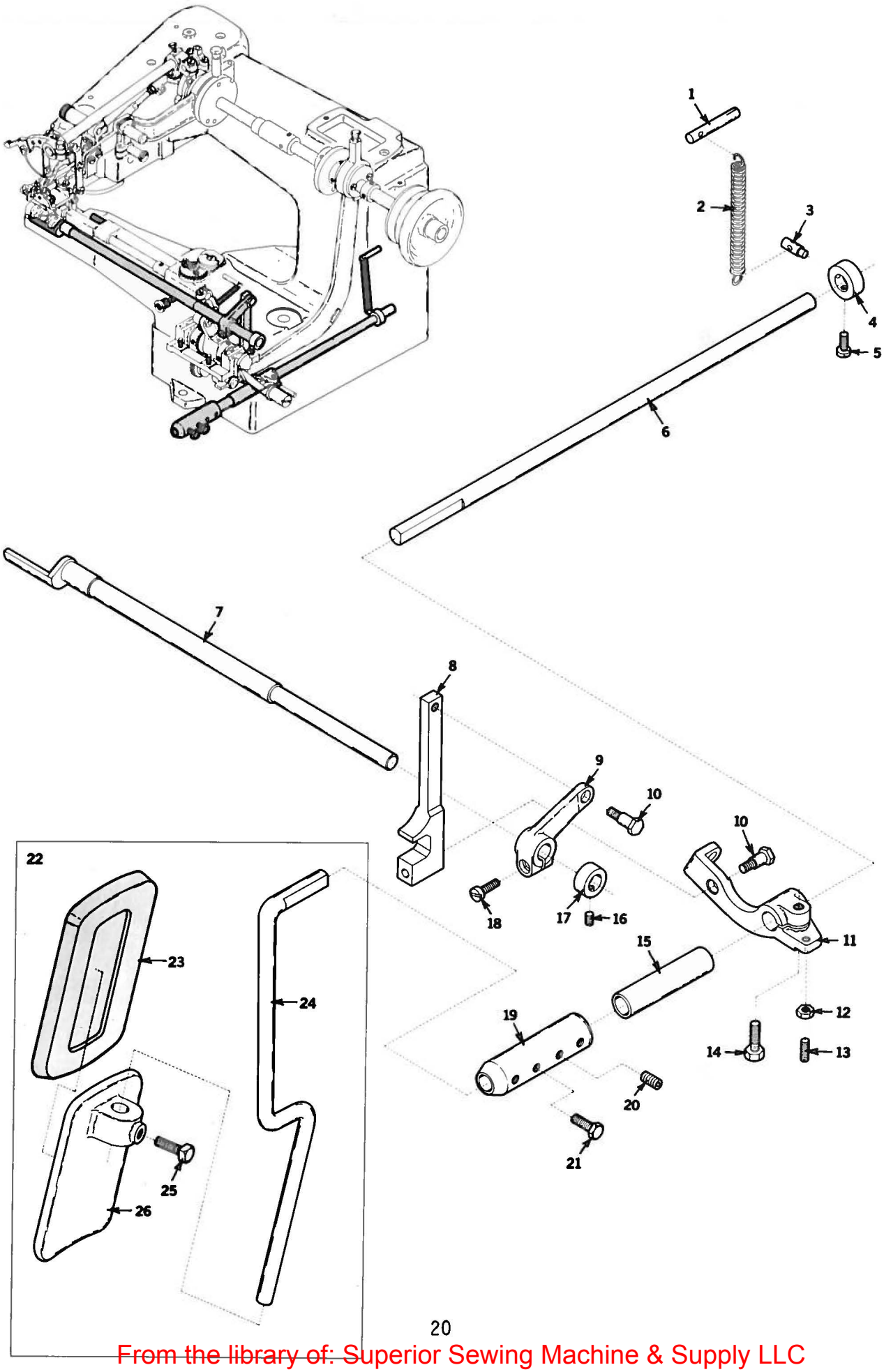

KNEE PRESS PARTS

Ref. No.	Part No.	Description	Amt. Req.
1	Y80325	Spring Pin	1
2	Y80309	Spring	1
3	Y724	Pin	1
4	Y80308	Collar	1
5	Y4397	Screw	1
6	Y80304	Shaft	1
7	Y80313	Shaft	1
8	Y80311	Connecting Link	1
9	Y80312	Lever	1
10	Y6047	Screw	2
11	Y80310	Lever	1
12	Y339	Nut	1
13	Y3394	Stop Screw	1
14	Y5565	Screw	1
15	Y80306	Spacer	1
16	Y3393	Screw	1
17	Y80314	Collar	1
18	Y4552	Screw	1
19	Y80303	Sleeve	1
20	Y3670	Screw	2
21	Y5555	Screw	2
22	Y80300	Knee Press, Complete	1
23	Y80299	Cushion	1
24	Y80302	Rod	1
25	Y5662	Screw	1
26	Y80301	Pad	1

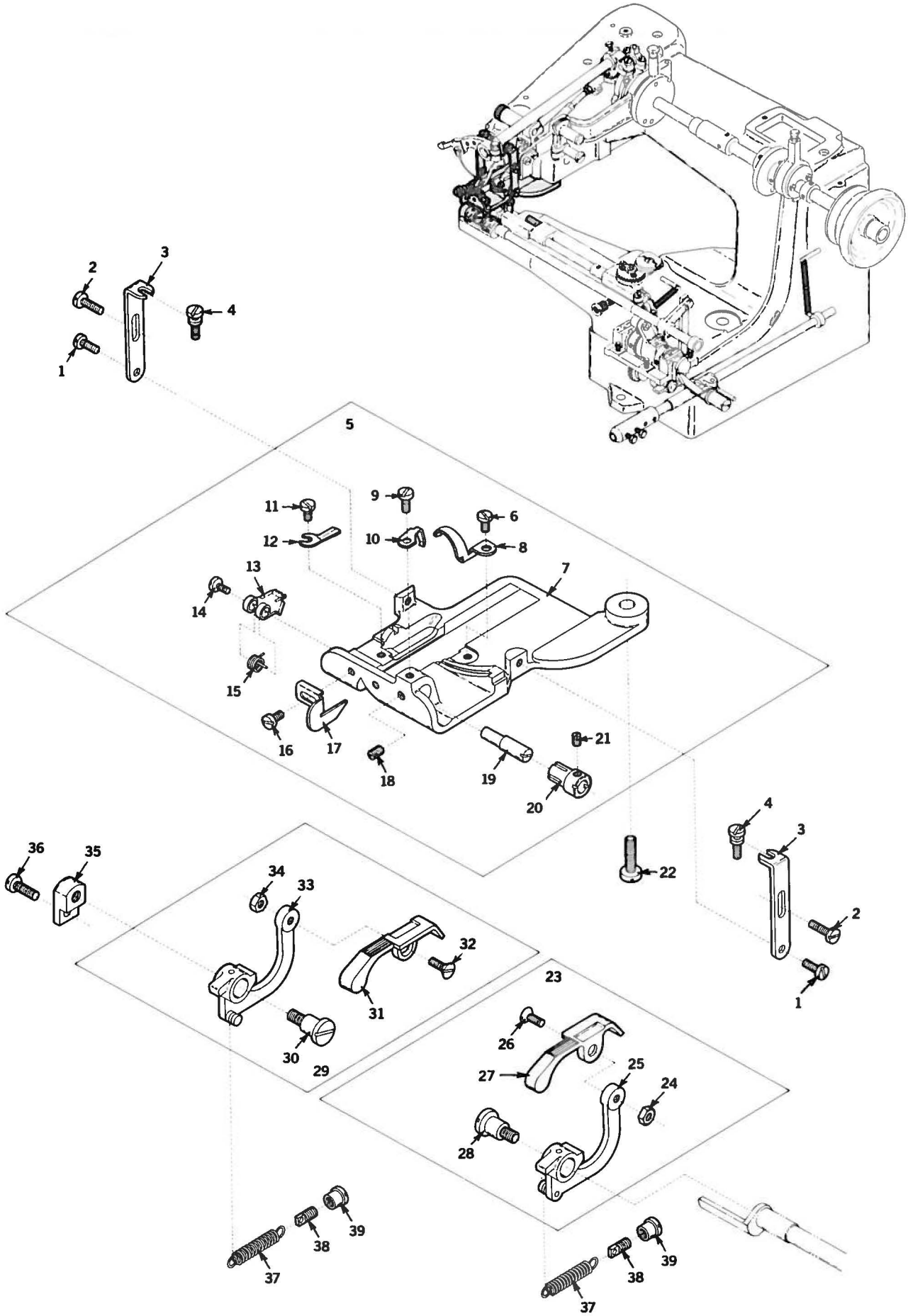

PRESSER FOOT AND FEED PLATES

Ref. No.	Part No.	Description	Amt. Req.
1	Y4317	Screw	2
2	Y4398	Screw	2
3	Y80381	Presser Foot Bracket	2
4	Y7420	Adjusting Screw	2
5	Y80290	Presser Foot Assembly, Complete for Style N150-1	1
6	Y4246	Screw	1
7	Y80291	Presser Foot	1
8	Y80418	Chaining Finger	1
9	Y4395	Screw	1
10	Y80357	Retainer Stop	1
11	Y4393	Screw	1
12	Y80358	Needle Guide	1
13	Y81352	Retainer	1
14	Y4245	Screw	1
15	Y80355	Spring	1
16	Y4283	Screw	1
17	Y81354	Edge Guide	1
18	Y3393	Screw	1
19	Y80354	Eccentric Pin	1
20	Y80356	Bushing	1
21	Y3312	Screw	1
22	Y4642	Screw	1
23	Y80398	Feed Plate, Complete, (right)	1
24	Y338	Nut	1
25	Y80346	Feed Plate Holder	1
26	Y6339	Screw	1
27	Y80395	Feed Plate	1
28	Y6051	Screw	1
29	Y80399	Feed Plate, Complete, (left)	1
30	Y6051	Screw	1
31	Y80396	Feed Plate	1
32	Y6339	Screw	1
33	Y80321	Feed Plate Holder	1
34	Y339	Nut	1
35	Y80316	Holder	1
36	Y4481	Screw	1
37	Y80348	Feed Plate Holder Spring	2
38	Y6638	Screw	2
39	Y239	Adjusting Nut	2

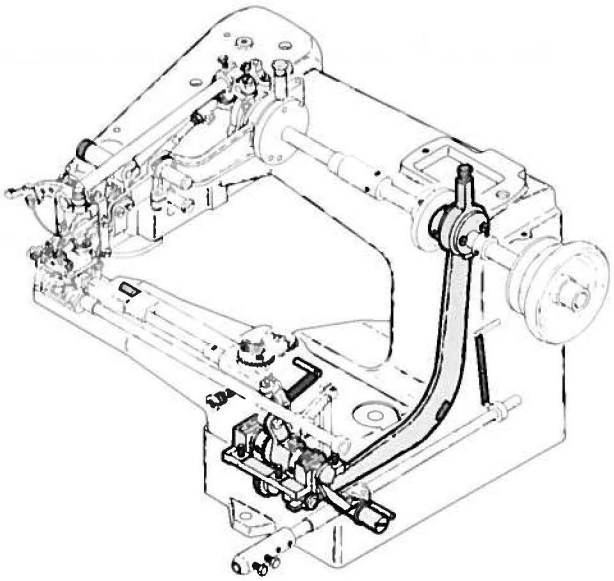

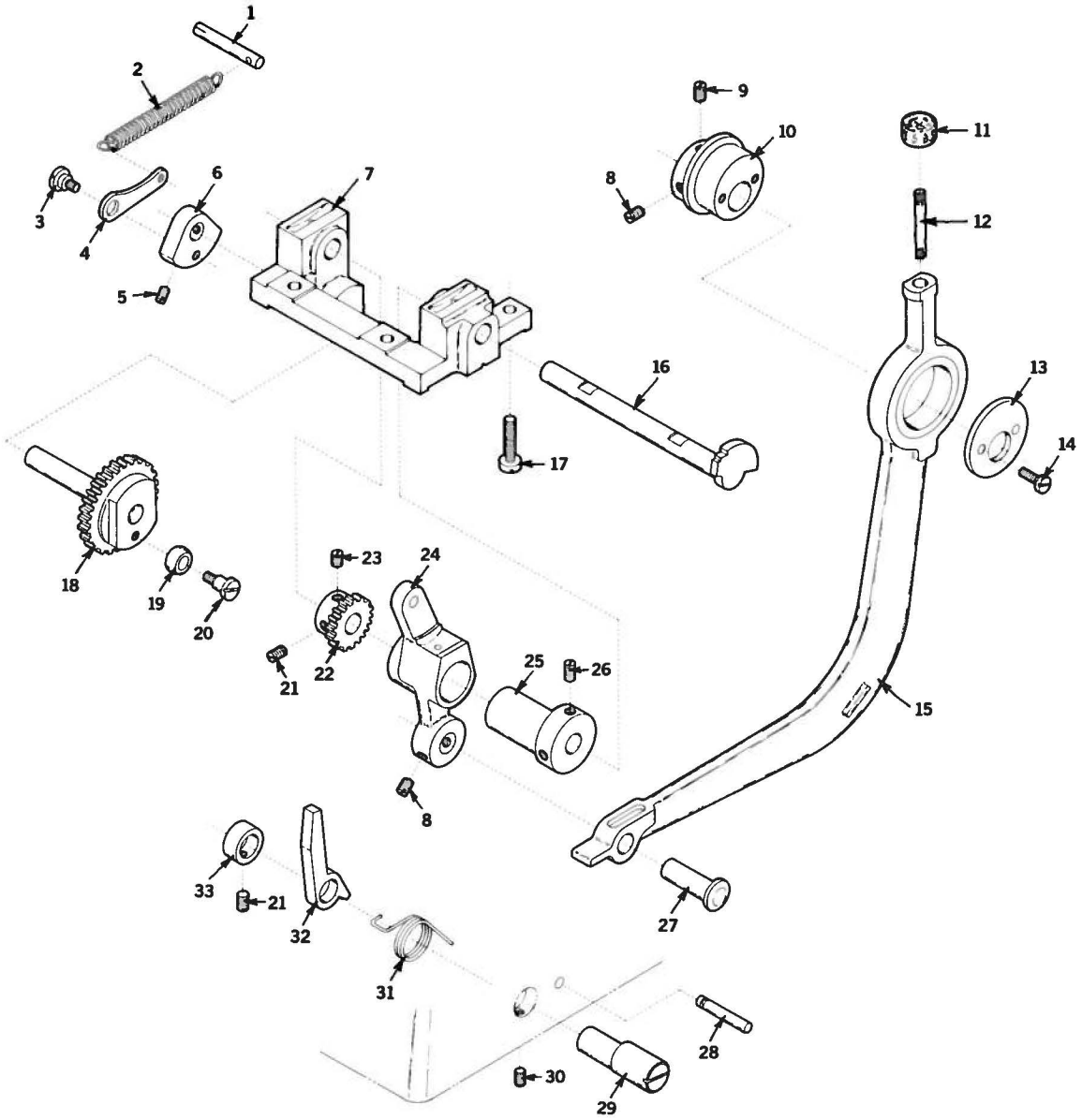

RIDGE FORMING DRIVING PARTS

Ref. No.	Part No.	Description	Amt. Req.
1	Y80325	Spring Pin	1
2	Y80309	Spring	1
3	Y6048	Screw	1
4	Y80659	Connecting Link	1
5	Y3556	Screw	2
6	Y80658	Collar	1
7	Y80651	Ridge Former Bracket	1
8	Y3555	Screw	3
9	Y3559	Screw	1
10	Y81601	Ridge Former Eccentric, for Styles N150-1, -5	1
11	Y80619	Oil Cap	1
12		Oil Wick	1
13	Y81602	Eccentric Washer, for Styles N150-1, -5	1
14	YA1196	Screw, for Styles N150-1, -5	2
15	Y81617	Connecting Rod, for Styles N150-1, -5	1
16	Y80656	Oscillating Shaft	1
17	Y5061	Screw	3
18	Y80005	Gear (large)	1
19	Y80652	Roller	1
20	Y6031	Screw	1
21	Y3554	Screw	2
22	Y80655	Gear (small)	1
23	Y8047	Screw	1
24	Y80606	Lever	1
25	Y80657	Eccentric	1
26	Y3558	Screw	2
27	Y80605	Connecting Pin	1
28	Y80665	Spring Pin	1
29	Y80661	Latch Pin	1
30	Y3473	Screw	1
31	Y80664	Spring	1
32	Y80663	Locking Latch	1
33	Y80662	Collar	1

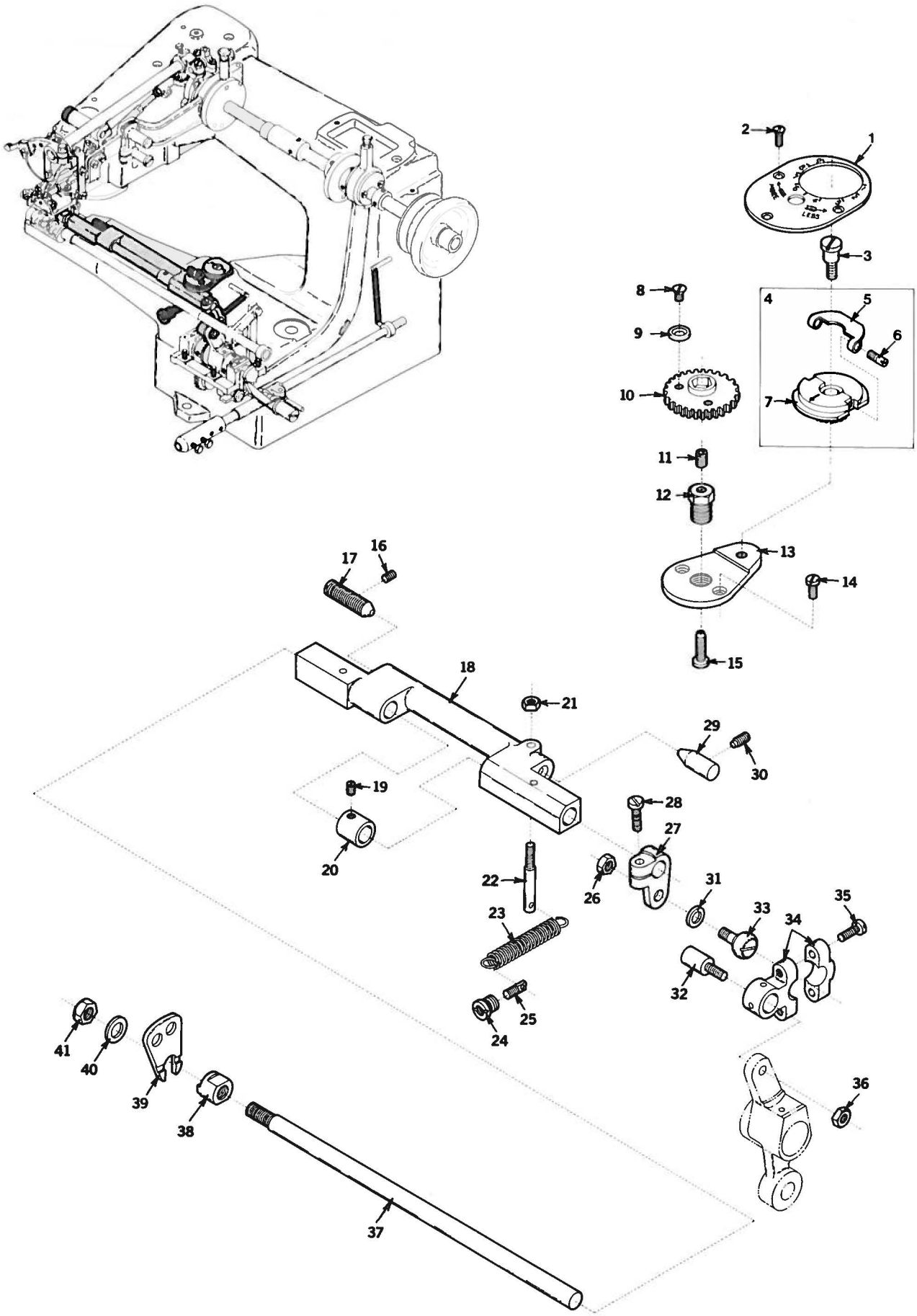

STITCH DEPTH REGULATING PARTS

Ref. No.	Part No.	Description	Amt. Req.
1	Y82108	Ridge Former Graduation Plate	1
2	Y5328	Screw	3
3	Y6520	Screw	1
4	Y80690	Ridge Former Regulator Assembly	1
5	Y80673	Handle	1
6	Y6222	Screw	2
7	Y80693	Regulator	1
8	Y5431	Screw	2
9	Y675	Washer	2
10	Y80694	Regulator Gear	1
11	Y3553	Locking Screw	1
12	Y6900	Screw	1
13	Y80692	Regulator Flange	1
14	YA7616	Screw	2
15	Y6855	Adjusting Screw	1
16	Y3559	Screw	1
17	Y6892	Pivot Screw	1
18	Y80612	Ridge Former Shaft Cradle	1
19	Y3393	Screw	1
20	Y80615	Collar	1
21	Y338	Nut	1
22	Y6639	Screw	1
23	Y80614	Cradle Spring	1
24	Y255	Nut	1
25	Y6651	Screw	1
26	Y355	Nut	1
27	Y80610	Ridge Former Shaft Lever	1
28	Y5047	Screw	1
29	Y80613	Pivot Bearing	1
30	Y3561	Screw	1
31	Y553	Washer	1
32	Y6242	Connecting Pin	1
33	Y80609	Ball Stud	1
34	Y80618	Connecting Link	1
35	Y4390	Screw	2
36	YA347	Nut	1
37	Y80611	Ridge Former Shaft	1
38	Y80616	Flange	1
39	Y81609	Ridge Former Disc, for Style N150-1	1
40	Y571	Washer	1
41	Y371	Nut	1

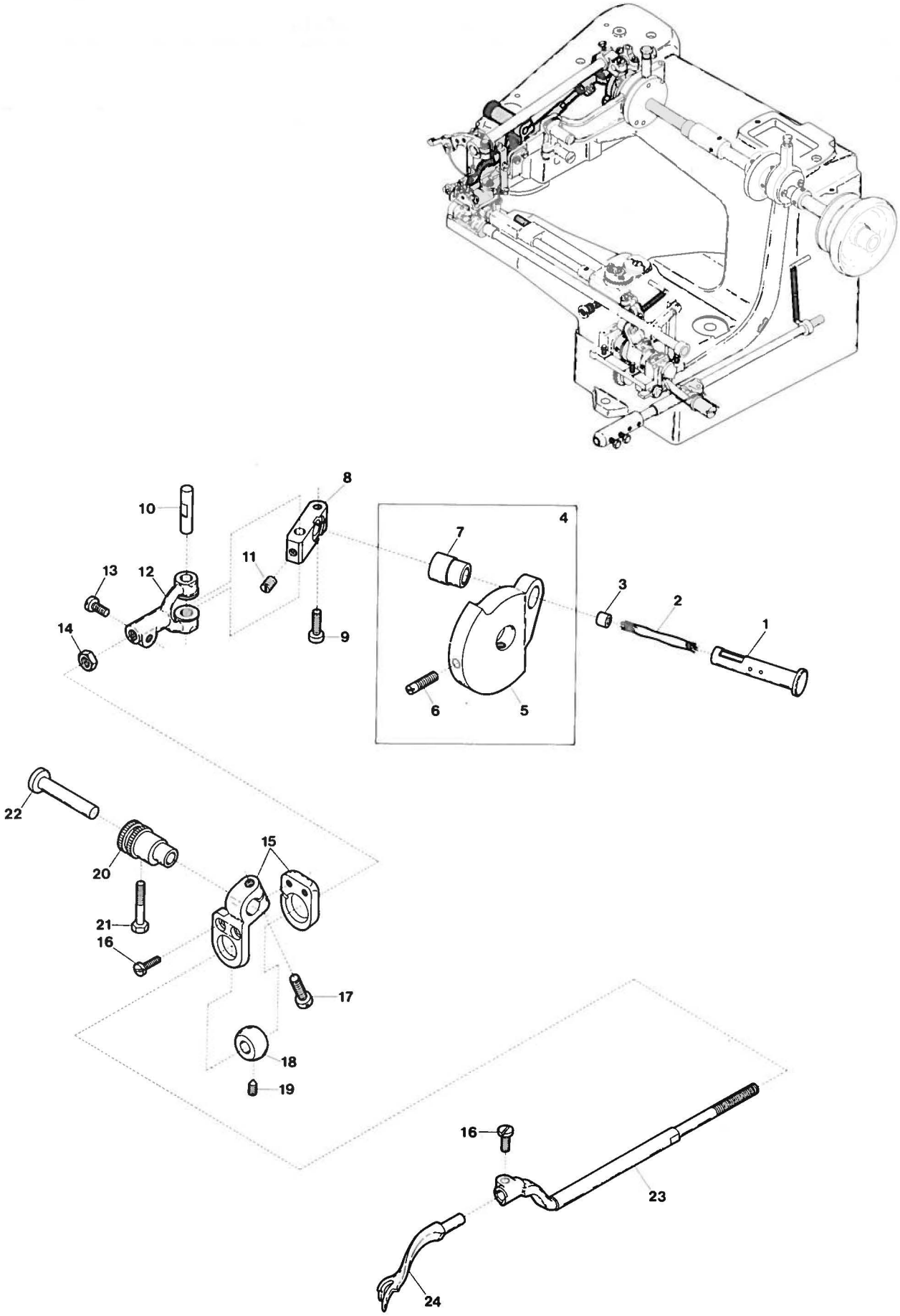

LOOPER DRIVING PARTS

Ref. No.	Part No.	Description	Amt. Req.
1	Y80403	Crank Pin	1
2	YA120	Oil Wick	1
3	Y80215	Oil Retainer (without hole)	1
4	Y80400	Looper Driving Crank, Complete	1
5	Y80401	Driving Crank	1
6	Y3560	Screw	2
7	Y80402	Crank Bushing	1
8	Y80404	Bearing Block	1
9	Y4280	Screw	1
10	Y80405	Yoke Pin	1
11	Y3471	Screw	1
12	Y80406	Looper Yoke	1
13	Y4399	Screw	1
14	Y354	Locking Nut	1
15	Y80415	Ball Joint	1
16	Y4312	Screw	3
17	Y4554	Screw	1
18	Y80408	Ball	1
19	Y3392	Screw	1
20	Y80411	Eccentric Sleeve	1
21	Y5558	Screw	1
22	Y80412	Eccentric Pin	1
23	Y80407	Looper Carrier	1
24	Y80413	Looper	1

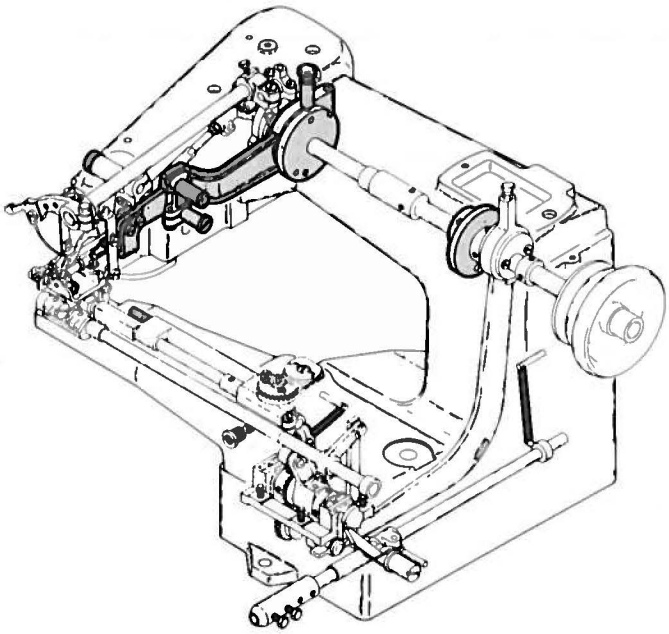

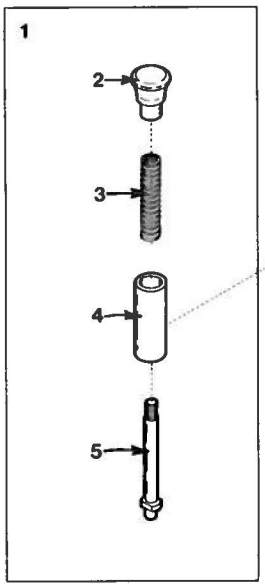

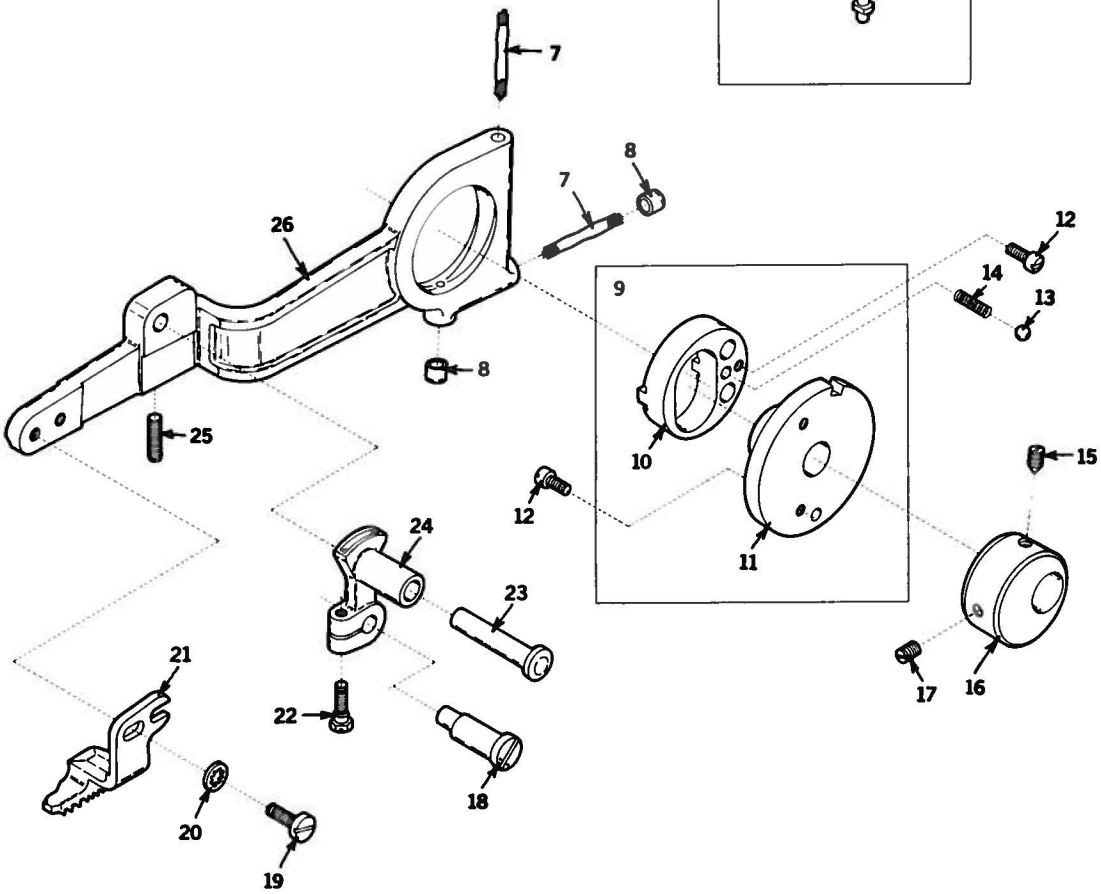

FEED DRIVING PARTS

Ref. No.	Part No.	Description	Amt. Req.
1	Y80520	Feed Regulating Pushbutton, Complete	1
2	Y80521	Pushbutton	1
3	Y80523	Spring	1
4	Y80524	Sleeve	1
5	Y80522	Shaft	1
6	Y3391	Screw	1
7		Oil Wick	2
8	Y80215	Oil Retainer (without hole)	2
9	Y80001	Feed Regulator, Complete	1
10	Y80502	Regulating Eccentric	1
11	Y80501	Regulator	1
12	Y4250	Screw	3
13	YA80503	Ball	1
14	Y80504	Ball Spring	1
15	Y3557	Screw	1
16	Y80294	Counterweight	1
17	Y3555	Screw	1
18	Y80508	Eccentric Pin	1
19	Y4471	Screw	2
20	Y552	Washer	2
21	Y80510	Feed Dog	1
22	Y5547	Screw	1
23	Y80507	Link Pin	1
24	Y80506	Link	1
25	Y3474	Screw	1
26	Y80296	Feed Lever	1

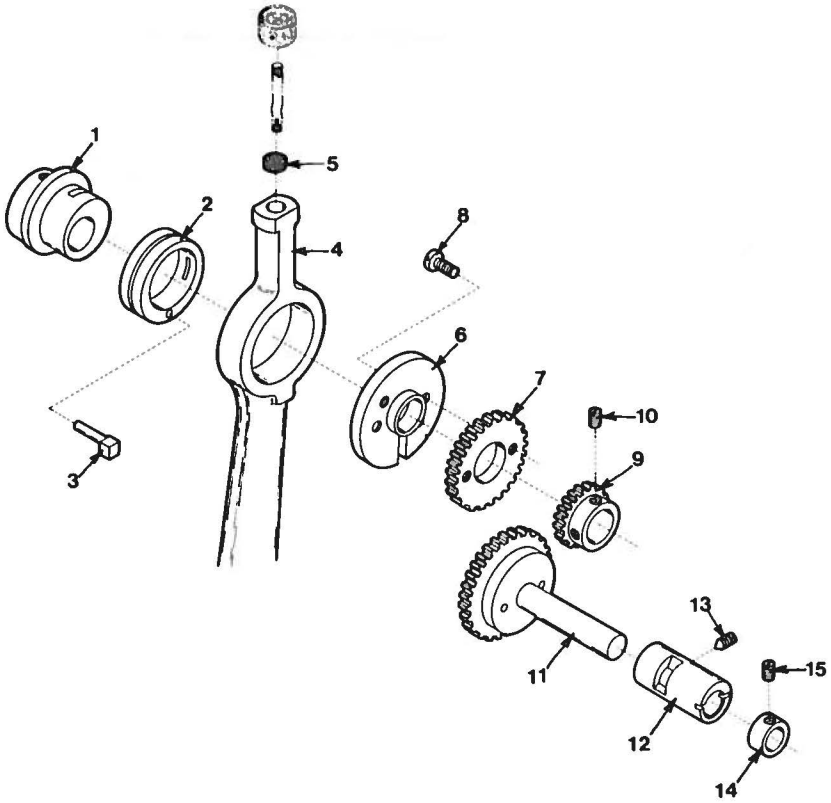

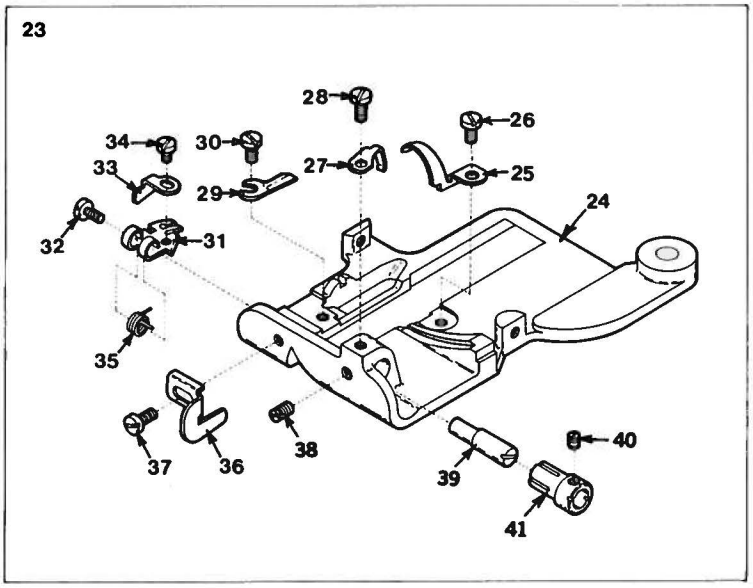

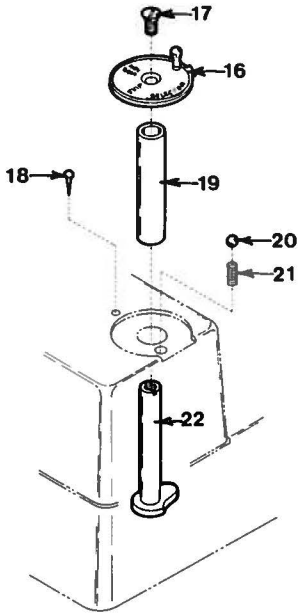

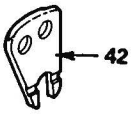

SKIP STITCH PARTS PECULIAR TO STYLE N150-2 ONLY

Ref. No	Part No.	Description	Amt. Req.
1	Y80601	Ridge Former Eccentric	1
2	Y80602	Skipstitch Eccentric	1
3	Y80624	Eccentric Pin	1
4	Y80603	Connecting Rod	1
5	Y80681	Oil Wick	1
6	Y80623	Gear Support	1
7	Y80646	Gear (large)	1
8	Y4281	Screw	2
9	Y80645	Gear (small)	1
10	Y8047	Screw	2
11	Y80647	Reduction Gear	1
12	Y80636	Eccentric Bushing	1
13	Y3641	Screw	1
14	Y80635	Collar	1
15	Y3393	Screw	2
16	Y80640	Skipstitch Selector	1
17	Y4475	Screw	1
18	Y721	Indicator Pin	1
19	Y80644	Bushing	1
20	YA80503	Ball	1
21	Y80675	Spring	1
22	Y80643	Shaft	1
23	Y81345	Presser Foot Assembly, Complete	1
24	Y80291	Presser Foot	1
25	Y80418	Finger	1
26	Y4246	Screw	1
27	Y80357	Retainer Stop	1
28	Y4395	Screw	1
29	Y80358	Needle Guide	1
30	Y4393	Screw	1
31	Y80352	Retainer	1
32	Y4245	Screw	1
33	Y80353	Guide	1
34	Y4241	Screw	1
35	Y80355	Spring	1
36	Y80360	Edge Guide	1
37	Y4283	Screw	1
38	Y3393	Screw	1
39	Y80354	Eccentric Stud	1
40	Y3312	Screw	1
41	Y80356	Bushing	1
42	Y80627	Ridge Former Disc	1

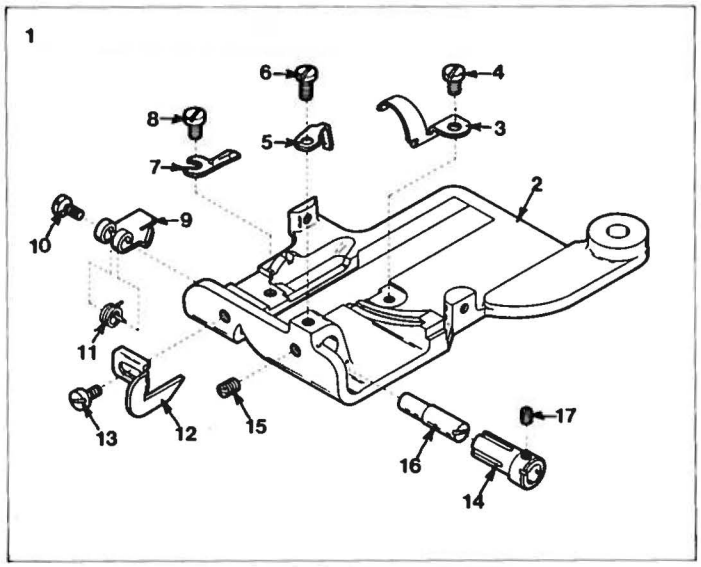

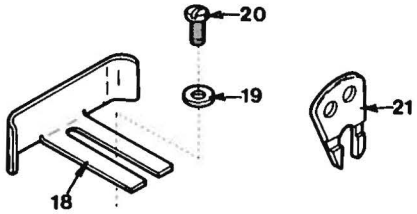

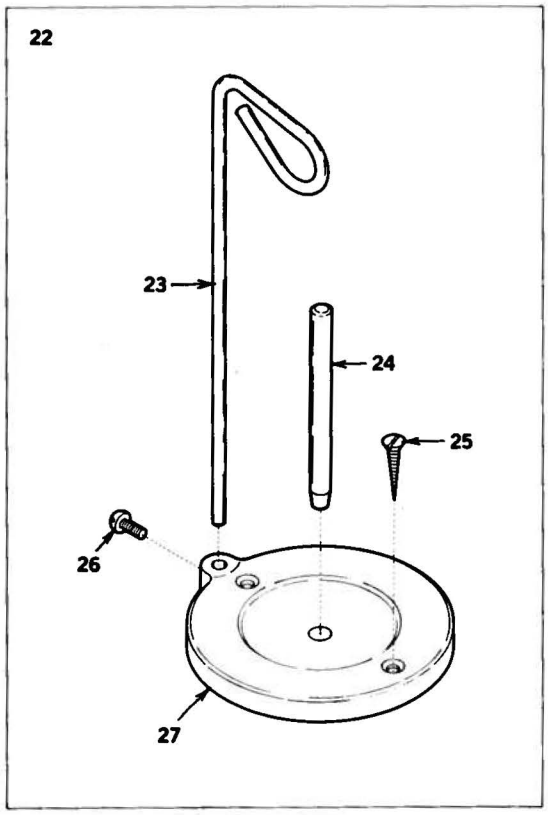

PRESSER FOOT, RIDGE FORMER, EDGE GUIDE FOR STYLE N150-5 ONLY

Ref. No.	Part No.	Description	Amt. Req.
1	Y81364	Presser Foot Assembly, Complete	1
2	Y80291	Presser Foot	1
3	Y80418	Chaining Finger	1
4	Y4246	Screw	1
5	Y80357	Retainer Stop	1
6	Y4395	Screw	1
7	Y80358	Needle Guide	1
8	Y4393	Screw	1
9	Y81366	Retainer	1
10	Y4245	Screw	1
11	Y80355	Spring	1
12	Y81354	Edge Guide	1
13	Y4283	Screw	1
14	Y80356	Bushing	1
15	Y3393	Screw	1
16	Y80354	Eccentric Stud	1
17	Y3312	Screw	1
18	Y81901	Edge Guide	1
19	Y554	Washer	2
20	YA9853	Screw	2
21	Y81629	Ridge Former Disc	1

ACCESSORIES

Ref. No.	Part No.	Description	Amt. Req.
22	Y80910	Thread Stand, Complete	1
23	Y80162	Thread Hanger	1
24	Y80163	Pin, Spool	1
25	Y5148	Screw	2
26	Y5147	Screw	1
27	Y80161	Thread Stand	1
28	Y5161	Bolt	3
29	Y362	Nut	3

NUMERICAL INDEX OF PARTS

NUMERICAL INDEX OF PARTS

MACHINE INVENTORY INFORMATION

Unit Number	Maker's Name	Machine Style	Serial Number	Needle Type	Date Of Purchase

ADDITIONAL INFORMATION: _____

Notes:

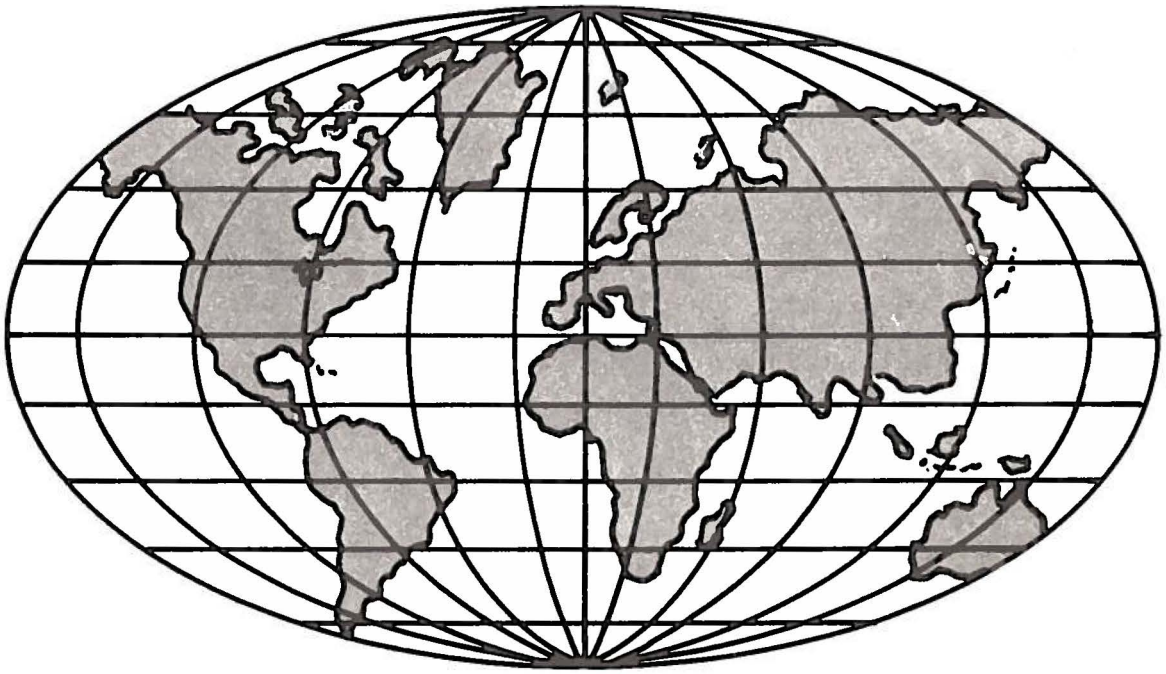

WORLDWIDE SALES AND SERVICE

Union Special Corporation maintains sales and service facilities throughout the world. These offices will aid you in the selection of the right sewing equipment for your particular operation. Union Special Corporation representatives and servicemen are factory trained and are able to serve your needs promptly and efficiently. Whatever your location, there is a Union Special Corporation representative to serve you. Check with him today.

It is important to remember that LEWIS® and COLUMBIA® machines are also products of Union Special Corporation, thus offering the industry the most complete line of the Finest Quality sewing machines.

Gainesville, GA
Norcross, GA
Chicago, IL
Dallas, TX
El Paso, TX
Commerce, CA
Philadelphia, PA
Opa-Locka, FL
Montreal, Quebec
Toronto, Ontario
Brussels, Belgium
Leicester, England
Paris, France
Stuttgart, W. Germany
Hong Kong
Osaka, Japan

Other Representatives throughout all parts of the world

Union Special®

Finest Quality Industrial Sewing Equipment

Union Special Corporation, 400 N. Franklin Street, Chicago, IL 60610, U.S.A.
Union Special, GmbH, Schwabstrasse 33, D-7000 Stuttgart 1, West Germany.

Printed in U.S.A.